LeisurePlay

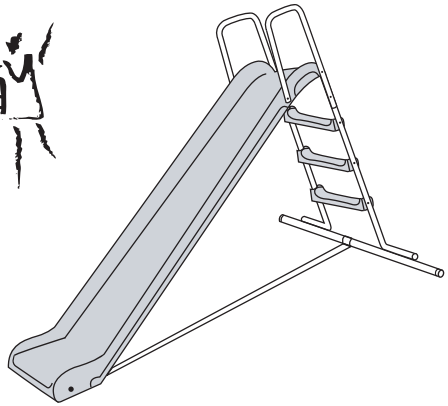

GIANT STRAIGHT SLIDE
For children aged 3 to 10

SAFETY NOTES

This product is to be used under the direct supervision of an adult.
This product must be assembled by adults.

Not suitable for children under 36 months due to dimensions and characteristics of the product.
For Family domestic use only! Intended for outdoor use only!
Place the slide on a level surface at least 2 meters from any structure or obstruction such as a fence, gorge, house, overhanging branch, laundry line or electrical wires.
Always supervise young children at play until they are physically competent and confident.
Check all nuts and bolts for tightness and tighten every time before use.
Check all coverings for bolts and sharp edges every time before use, and replace when required.
Check slide chute and other means of attachments for evidence of deterioration. Do not use the toy if deterioration is found.
DO NOT install the slide over concrete, asphalt or any other hard surface..
DO NOT orientate the slide directly towards the sun.
Check all the fixings regularly. If these checks are not carried out, the product may overturn or cause a fall.
When assembling this product keep all small component parts well away from young children and dispose of plastic bags safety.
The recommended age range of this product is 3-10 years, although parental discretion should be used.
Never position this slide on hard or abrasive surfaces -it should be situated on soft ground, ideally grass, and away from any hazardous obstructions.
Do not allow more than one child at a time to be on this equipment and observe maximum weight per child of 35kgs.
Do not allow children to climb on parts of this equipment no intended for this purpose.
Do not allow children to walk or climb up the chute, and do not allow children to travel head-first down it.
Do not allow other children to wander into the play area when the equipment is in use.
Do not allow children to crawl or hide under the chute.
Regularly check the item for wear and damage, removing the item from use when necessary until replacement parts are fitted.
This product is for domestic use only and has not been designed for commercial use in play centers, nurseries, etc.

Failure to assemble this item as per the instructions may cause injury to the user.
Please keep these instructions in a safe place for future reference.

Conform to BS EN71

CE

Helpline **01237426700**

PARTS LIST

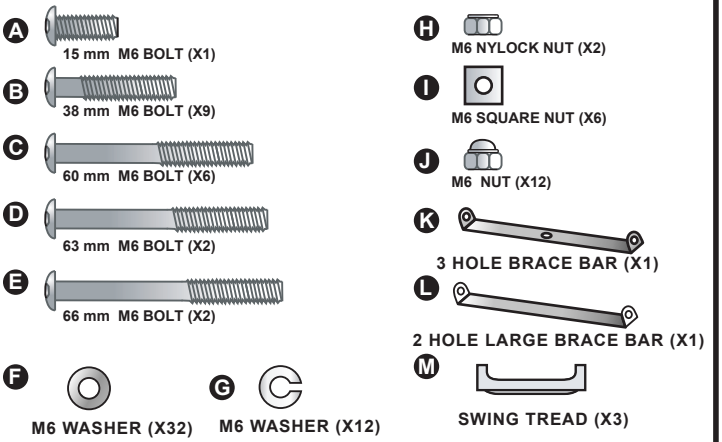

INCLUDED COMPONENTS

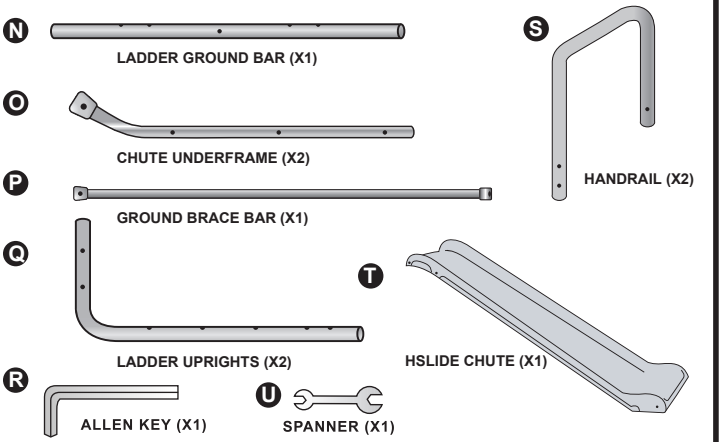

ASSEMBLY INSTRUCTIONS

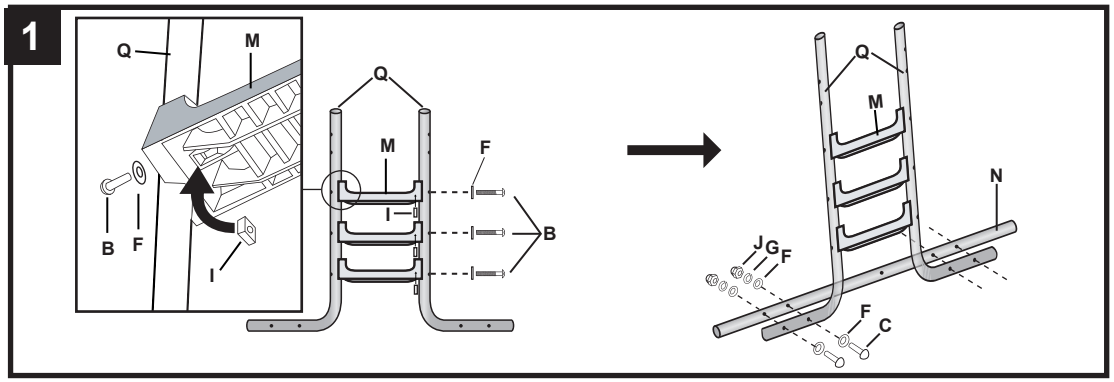

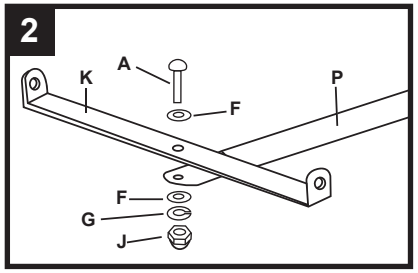

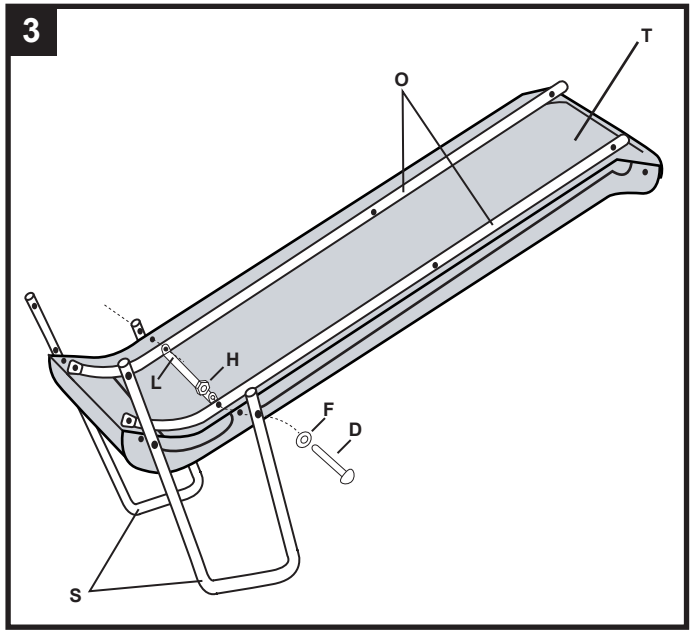

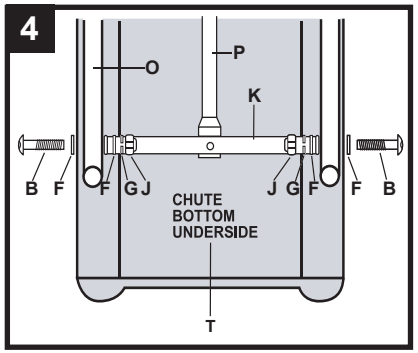

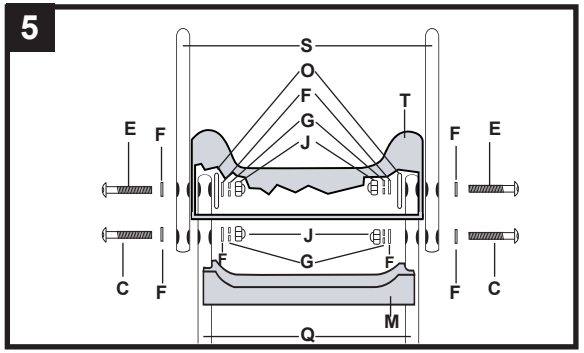

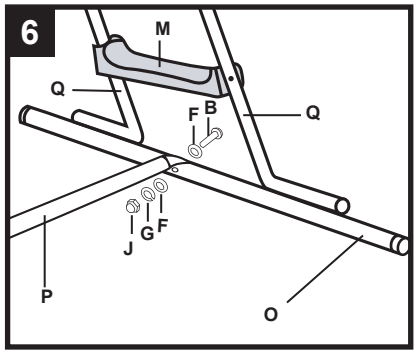

ONCE ASSEMBLY IS COMPLETED.... **Before allowing children to play on this product, carefully check the equipment for any sharp edges and points. In the unlikely event that you do find any, please call our helpline number below. Do not allow children to use this product until the problem has been corrected.**

IMPORTANT

Make sure you read the safety notice on the front page, and always supervise children while they are playing on this equipment

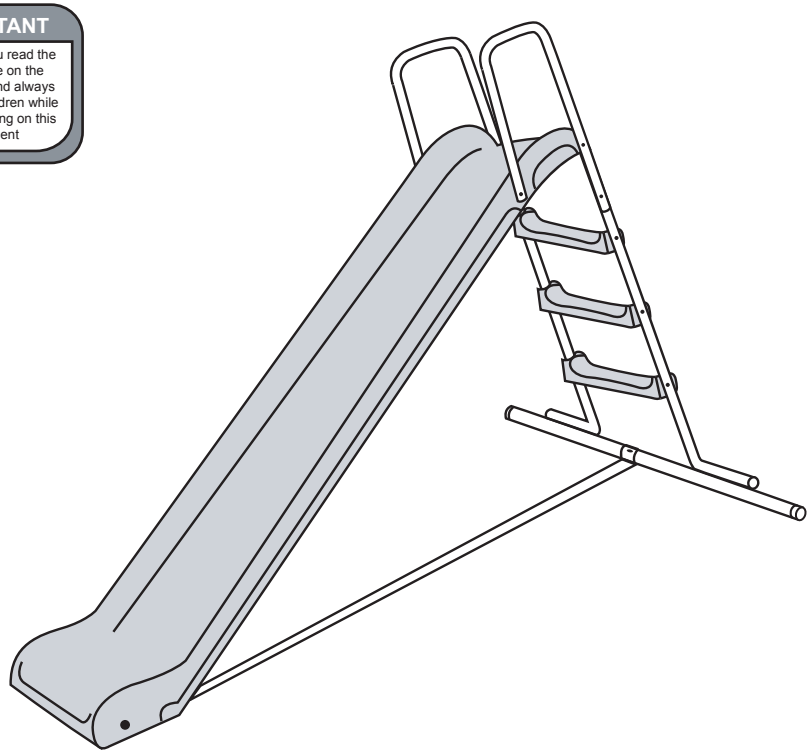

GUARANTEE

The metal framework of the equipment detailed within is guaranteed by Pot Black Ltd. For a period of 1 year from the date of purchase against failure due to rust perforation: (This being defined as the rusting through of metal tubes due to corrosion from the "inside out"). Plastic components are guaranteed for a period of 1 year from date of purchase. We take every precaution to ensure that this item is in good condition upon receipt. However, very occasionally parts do get damaged or are missing. Should this be the case with your purchase, firstly we apologize, secondly we invite you to contact our Customer Service Department (01237 426700).
Any defective part or parts will (as we see fit) either be exchanged or repaired free of charge. This guarantee is subject to the product having been used for the purpose for which it was designed, and assembled and maintained in accordance with these instruction. This guarantee does not cover any damage caused by storms, fire or floods, or by neglect or misuse. Any repairs or alternations carried out could also invalidate this guarantee. Please retain this guarantee and staple your receipt (Your proof of purchase) to these instructions for future reference. This guarantee does not affect or prejudice any statutory rights you may have. Please contact our Customer Service Department regarding any query or claim on this guarantee. Any claim under this guarantee must be notified to our Customer Service Department within 30 days.

Please fill in details after purchase

Product ref.:
Product description :
Customer name :
Address :

Post code :
Daytime tel :
Date of purchase :
Shop where purchased :

CUSTOMER SERVICE DEPARTMENT: TEL 01237 426700

MANUFACTURED IN CHINA FOR

Pot Black Ltd,
ALVERDISCOTT ROAD,
BIDFORD,
DEVON,
EX39 4PN.